注：不得依图形量测，应依标注数据为准。

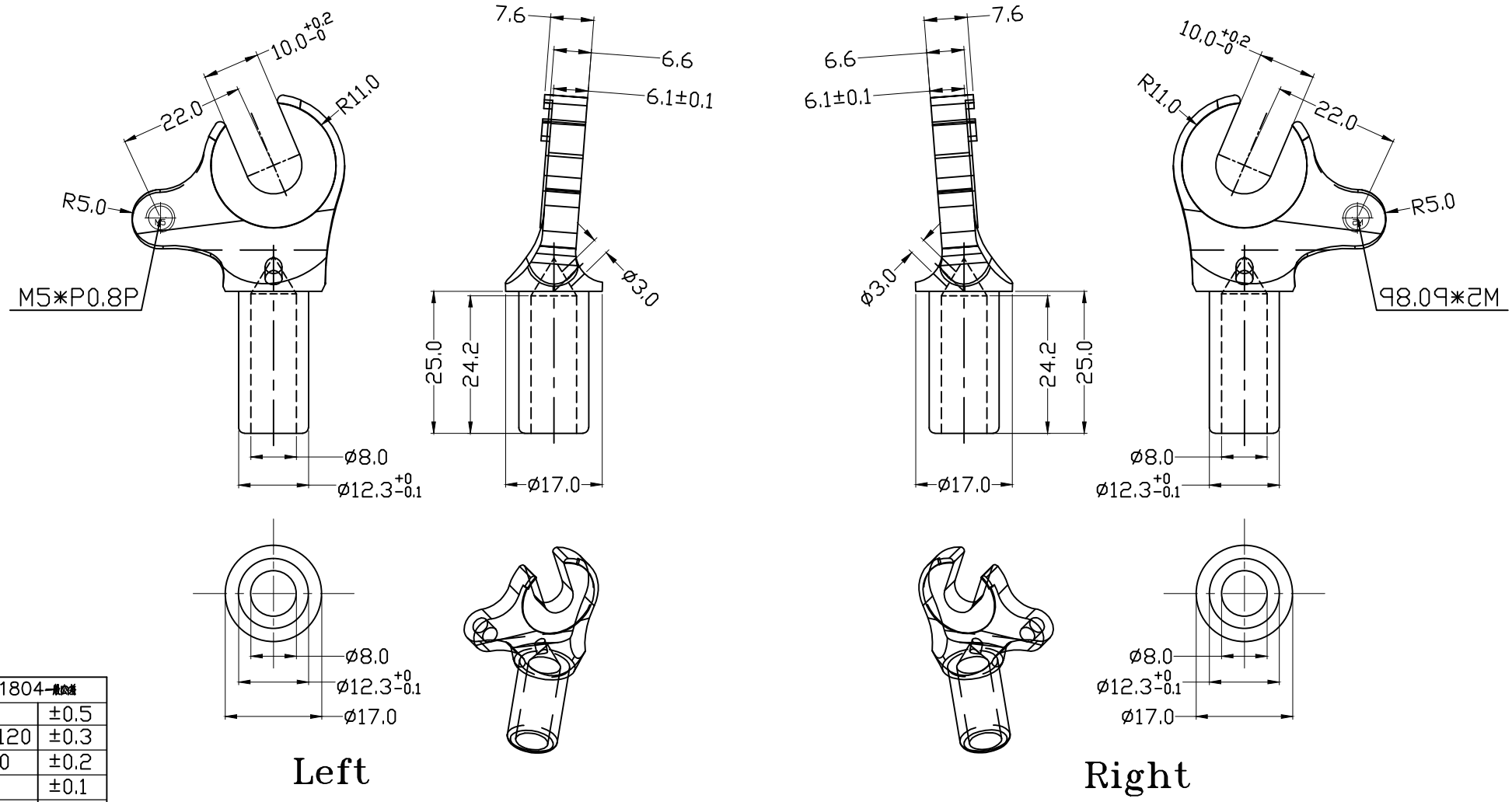

GB/T1804-一般公差	
120↑	±0.5
30~120	±0.3
6~30	±0.2
6↓	±0.1
角度	0.5°

PRODUCT ??:	????	UNIT ??:	MM	DRAWN BY ??:	11.03.01	?? INDENTATION	HRB52	??	??	? 1?	???		4		
RAWING NO ????:	9E-0036-?	SCALE ??:	1:1	CHECKED BY ??:		???? (??)????							3		
CLIENT ??:	???	MASTERIAL ??:	???	APPROWVED BY ??:		JIANGDING,HANDWARE.MANUFACTURE.CO.LTD							2		
													1		
													SIGN	MODIFY DATE	DESCRIPTION